Rod thermostats, temperature control

Enclosure	Type	Operation	Contact	Measurement	Ranges °C	Models
IP65, IK10	Control	Mechanical	SPDT	Rod	+500°C / -35°C	Y1S8G & Y1R8G
Material						
Aluminum						

Y1S8G: External adjustment (With pilot light)

Y1R8G: Internal adjustment (Without pilot light)

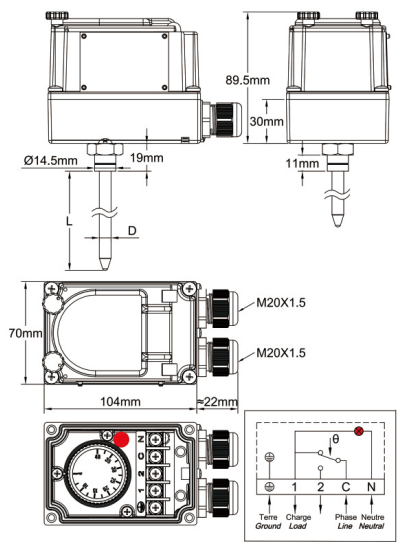

Applications

These liquid expansion rod thermostats can be installed inside pockets as immersion thermostats in pipelines and containers, and for monitoring temperature in air ducts, in usual industrial applications and environments. (Not suitable for hazardous areas).
-Internal adjustment is convenient for products that must not be frequently adjusted.
-Insensibility to strong vibrations

Housing: Aluminum, IP65, IK10. Grey RAL7032 epoxy painting. Stainless steel captive cover screws. Captive aluminum lid.
Set point adjustment ranges: -35+35°C (-30+95°F); -10+40°C (15-105°F); 4-40°C (40-105°F); 0-60°C (32-140°F); 0-90°C (32-195°F); 30-90°C (85-195°F); 30-110°C (85-230°F); 50-200°C (120-390°F); 50-300°C (120-570°F); 100-400°C (210-750°F); 100-500° C (210-930°F)
Set point adjustment: By °C printed knob. All types have an adjustable rotation limit system located inside the knob that allows reducing the set point adjustment span. Types with external adjustment have a transparent window. This device allows seeing the pilot light and the knob position. °F values are available as an option.
Action: Temperature control, On-Off action.
Sensing element: Liquid expansion rod. This rod has a non-temperature sensing zone named dead zone which allows thermal insulation crossing. An increased diameter under the thermostat head allows mounting pockets, coolers or brackets (See pockets in the accessories section)
Electrical connections: Inside, on screw terminal connection block.
Earthing: Internal and external screw terminal.
Pilot light: Allow to visualize thermostat contact output position. Standard for all models with transparent window. Non Standard and on special request only for models with plain aluminum cover.
Cable input and output: Two M20 cable glands, Black PA66.
Identification: Metallic identification label, riveted.
Contact: SPDT
Electrical rating, resistive loads:
-Open on temperature rise contact (C-1)
16A 250V, 50 ~60Hz: >100000 cycles,
20A 250V, 50 ~60Hz: ≥ 50000 cycles,
10A 400V, 50 ~60Hz: ≥ 50000 cycles.
-Close on temperature rise contact (C-2): 6A 250V 50 ~60Hz: >100000 cycles
Electrical rating, inductive loads:
-Open on temperature rise contact (C-1): 6A 250V, 50 ~60Hz: >100000 cycles
-Close on temperature rise contact (C-2): 0.6A 250V 50 ~60Hz: >100000 cycles
Minimum storage temperature: -35°C (-30°F)
Maximum ambient temperature: 60°C (140°F)
For more technical information ask 8G thermostat technical data sheet (catalog 1).

E-Mail: info@ultimheat.com Web: www.ultimheat.com

Rod thermostats, temperature control

(P2)

Main references*

Temperature range °C (°F)	Reference with external adjustment	Reference with internal adjustment	Rod length *(L, mm)	Rod diameter (D, mm)	Temperature sensing length (mm)	Differential°C (°F)	Max temperature on rod °C (°F)
-35+35°C (-30+95°F)	Y1S8G5035AO1023J	Y1R8G5035AO1023J	230	10	140	1,6±1°C (2,9±2°F)	60°C (140°F)
-35+35°C (-30+95°F)	Y1S8G5035AO1030J	Y1R8G5035AO1030J	300	10	140	1,6±1°C (2,9±2°F)	60°C (140°F)
-10+40°C (15-105°F)	Y1S8G0040AO1023J	Y1R8G0040AO1023J	230	10	140	1,5±1°C (2,7±2°F)	70°C (158°F)
-10+40°C (15-105°F)	Y1S8G0040AO1030J	Y1R8G0040AO1030J	300	10	140	1,5±1°C (2,7±2°F)	70°C (158°F)
4-40°C (40-105°F)	Y1S8G4040AO1023J	Y1R8G4040AO1023J	230	10	140	1±0.5°C (1,8±1°F)	70°C (158°F)
4-40°C (40-105°F)	Y1S8G4040AO1030J	Y1R8G4040AO1030J	300	10	140	1±0.5°C (1,8±1°F)	70°C (158°F)
4-40°C (40-105°F)	Y1S8G4040AO1045J	Y1R8G4040AO1045J	450	10	140	1±0.5°C (1,8±1°F)	70°C (158°F)
0-60°C (32-140°F)	Y1S8G0060AO1023J	Y1R8G0060AO1023J	230	10	87	2.5±1°C (4,5±1,8°F	80°C (176°F)
0-60°C (32-140°F)	Y1S8G0060AO1030J	Y1R8G0060AO1030J	300	10	87	2.5±1°C (4,5±1,8°F	80°C (176°F)
0-60°C (32-140°F)	Y1S8G0060AO1045J	Y1R8G0060AO1045J	450	10	87	2.5±1°C (4,5±1,8°F	80°C (176°F)
0-60°C (32-140°F)	Y1S8G0060AO1060J	Y1R8G0060AO1060J	600	10	87	2.5±1°C (4,5±1,8°F	80°C (176°F)
0-90°C (32-195°F)	Y1S8G0090AO1023J	Y1R8G0090AO1023J	230	10	87	2.5±1°C (4,5±1,8°F)	120°C (250°F)
0-90°C (32-195°F)	Y1S8G0090AO1030J	Y1R8G0090AO1030J	300	10	87	2.5±1°C (4,5±1,8°F)	120°C (250°F)
0-90°C (32-195°F)	Y1S8G0090AO1045J	Y1R8G0090AO1045J	450	10	87	2.5±1°C (4,5±1,8°F)	120°C (250°F)
0-90°C (32-195°F)	Y1S8G0090AO1060J	Y1R8G0090AO1060J	600	10	87	2.5±1°C (4,5±1,8°F)	120°C (250°F)
30-90°C (85-195°F)	Y1S8G3090AO1023J	Y1R8G3090AO1023J	230	10	87	2.5±1°C (4,5±1,8°F)	120°C (250°F)
30-90°C (85-195°F)	Y1S8G3090AO1030J	Y1R8G3090AO1030J	300	10	87	2.5±1°C (4,5±1,8°F)	120°C (250°F)
30-90°C (85-195°F)	Y1S8G3090AO1045J	Y1R8G3090AO1045J	450	10	87	2.5±1°C (4,5±1,8°F)	120°C (250°F)
30-90°C (85-195°F)	Y1S8G3090AO1060J	Y1R8G3090AO1060J	600	10	87	2.5±1°C (4,5±1,8°F)	120°C (250°F)
30-110°C (85-230°F)	Y1S8G3110AO1023J	Y1R8G3110AO1023J	230	10	83	2.5±1°C (4,5±1,8°F)	140°C (284°F)
30-110°C (85-230°F)	Y1S8G3110AO1030J	Y1R8G3110AO1030J	300	10	83	2.5±1°C (4,5±1,8°F)	140°C (284°F)
30-110°C (85-230°F)	Y1S8G3110AO1045J	Y1R8G3110AO1045J	450	10	83	2.5±1°C (4,5±1,8°F)	140°C (284°F)
30-110°C (85-230°F)	Y1S8G3110AO1060J	Y1R8G3110AO1060J	600	10	83	2.5±1°C (4,5±1,8°F)	140°C (284°F)
50-200°C (120-390°F)	Y1S8G5200AO1023J	Y1R8G5200AO1023J	230	10	59	4±2°C (7±3.6°F)	230°C (446°F)
50-200°C (120-390°F)	Y1S8G5200AO1030J	Y1R8G5200AO1030J	300	10	59	4±2°C (7±3.6°F)	230°C (446°F)
50-200°C (120-390°F)	Y1S8G5200AO1045J	Y1R8G5200AO1045J	450	10	59	4±2°C (7±3.6°F)	230°C (446°F)
50-200°C (120-390°F)	Y1S8G5200AO1060J	Y1R8G5200AO1060J	600	10	59	4±2°C (7±3.6°F)	230°C (446°F)
50-300°C (120-570°F)	Y1S8G5300AO0823J	Y1R8G5300AO0823J	230	8	165	10°C±2°C (18±3.6°F)	330°C (626°F)
50-300°C (120-570°F)	Y1S8G5300AO0830J	Y1R8G5300AO0830J	300	8	165	10°C±2°C (18±3.6°F)	330°C (626°F)
50-300°C (120-570°F)	Y1S8G5300AO0845J	Y1R8G5300AO0845J	450	8	165	10°C±2°C (18±3.6°F)	330°C (626°F)
50-300°C (120-570°F)	Y1S8G5300AO0860J	Y1R8G5300AO0860J	600	8	165	10°C±2°C (18±3.6°F)	330°C (626°F)
100-400°C (210-750°F)	Y1S8GA400AO0823J	Y1R8GA400AO0823J	230	8	165	10°C±2°C (18±3.6°F)	430°C (800°F)
100-400°C (210-750°F)	Y1S8GA400AO0830J	Y1R8GA400AO0830J	300	8	165	10°C±2°C (18±3.6°F)	430°C (800°F)
100-400°C (210-750°F)	Y1S8GA400AO0845J	Y1R8GA400AO0845J	450	8	165	10°C±2°C (18±3.6°F)	430°C (800°F)
100-400°C (210-750°F)	Y1S8GA400AO0860J	Y1R8GA400AO0860J	600	8	165	10°C±2°C (18±3.6°F)	430°C (800°F)
100-500°C (210-930°F)	Y1S8GA500AN0830J	Y1R8GA500AN0830J	300	8	250	10°C±2°C (18±3.6°F)	550°C (1000°F)
100-500°C (210-930°F)	Y1S8GA500AN0845J	Y1R8GA500AN0845J	450	8	250	10°C±2°C (18±3.6°F)	550°C (1000°F)
100-500°C (210-930°F)	Y1S8GA500AN0860J	Y1R8GA500AN0860J	600	8	250	10°C±2°C (18±3.6°F)	550°C (1000°F)

°F printing: replace last character (J) by K

*Above 200°C we recommend to use a rod cooler reference 66RF07015 or 66RF0701F12 between the rod and the enclosure (see accessories). Caution: This cooler reduces the usable rod length by 70mm

Knob printings

°C Printing					
0-10	-35+35°C	-10+40°C	4-40°C	0-60°C	0-90°C
			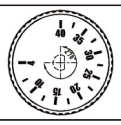		
30-90°C	30-110°C	50-200°C	50-300°C	100-400°C	100-500°C
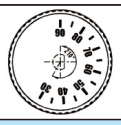	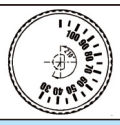				

°F Printing					
0-10	-30+95°F	15-105°F	40-105°F	32-140°F	32-195°F
					
85-195°F	85-230°F	120-390°F	120-570°F	210-750°F	210-930°F